CYCLONE SEPARATOR

MODEL DC7 STAINLESS STEEL

Features

All stainless steel separator, employing a cyclone-effect to efficiently separate condensate from steam, air and gases*.

1. All-welded, maintenance-free construction.
2. Compact and light weight.
3. All parts made from stainless steel with high durability and corrosion resistance for long service life.
4. Separator achieves condensate separation efficiency as high as 98%.

* Consult TLV for toxic, flammable or otherwise hazardous gases.

Specifications

Model		DC7		
Connection		Screwed	Socket Welded	Flanged
Size		½″, ¾″, 1″, 1½″, 2″	DN 15, 20, 25, 40, 50	
Maximum Operating Pressure (barg)	PMO	25		
Maximum Operating Temperature (℃)	TMO	300		

PRESSURE SHELL DESIGN CONDITIONS (**NOT** OPERATING CONDITIONS): 1 bar = 0.1 MPa
Maximum Allowable Pressure (barg) PMA: 25
Maximum Allowable Temperature (℃) TMA: 300

CAUTION To avoid abnormal operation, accidents or serious injury, DO NOT use this product outside of the specification range. Local regulations may restrict the use of this product to below the conditions quoted.

No.	Description	Material*	DIN	ASTM/AISI
①	Body	Cast Stainless Steel SCS13A	1.4308	A351 Gr. CF8
②	Separator	Cast Stainless Steel SCS13	1.4308	A351 Gr. CF8
③	Separator Body	Stainless Steel SUS304	1.4301	AISI304
④	Separator Bottom	Cast Stainless Steel SCS13A	1.4308	A351 Gr. CF8
⑤	Baffle	Stainless Steel SUS304	1.4301	AISI304
⑥	Flange	Cast/Stainless Steel SUS304/SCS13A**	1.4301/1.4308	AISI304/A351 Gr. CF8
⑦	Nameplate	Stainless Steel SUS304	1.4301	AISI304

* Equivalent materials ** Material depends on flange specifications

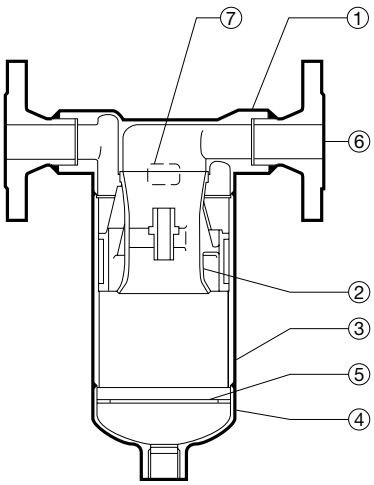

Copyright © TLV

Dimensions

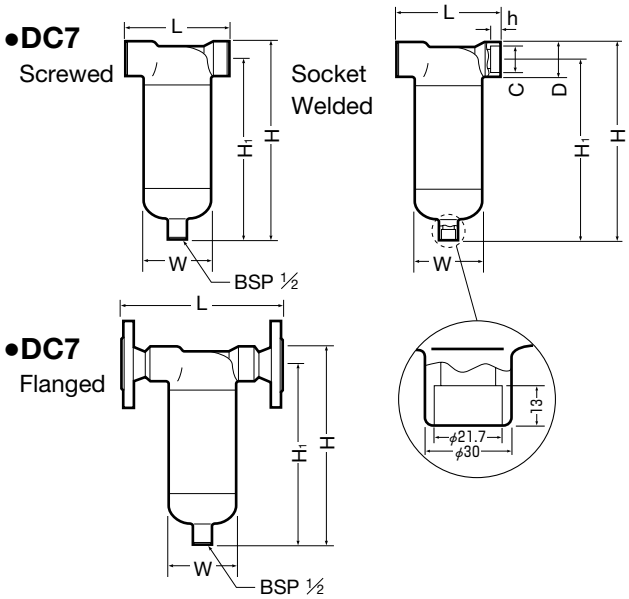

DC7 Screwed*/Socket Welded** (mm)

Size*	DN**	L	H	H_1	ϕW	ϕD	ϕC	h	Weight (kg)
½″	15	130	229	210	89	36	21.70	13	3.4
¾″	20						27.05		
1″	25	150	263	240	101	44	33.80		5.3
1½″	40	170	326	295	114	59	48.65		6.5
2″	50	220	397	360	165	72	61.10	16	15

* BSP DIN 2999, other standards available
** Suitable for DIN 3239, other standards available

DC7 Flanged (mm)

DN	L			H	H_1	ϕW	Weight* (kg)
	DIN 2501	ASME Class					
	PN25/40	150RF	300RF				
15	198	178	178	229	210	89	5.0
20	202	191	191				5.6
25	232	227	227	263	240	101	8.1
40	252	251	258	326	295	114	11
50	310	331	337	397	360	165	22

Other standards available, but length and weight may vary
* Weight is for DIN PN 25/40

Flow Rate (Steam)

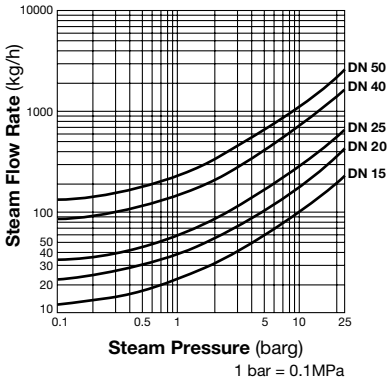

The chart to the left is used to determine the steam flow rate through the DC7 separator. It is based on a steam velocity in the piping of 30 m/sec. For other velocities, calculate the flow rate as follows:

Flow rate at v m/sec

$$= \text{Flow rate (at 30 m/sec)} \times \frac{v}{30}$$

It is recommended that velocities not exceed 30 m/sec.

Pressure Loss (Steam)

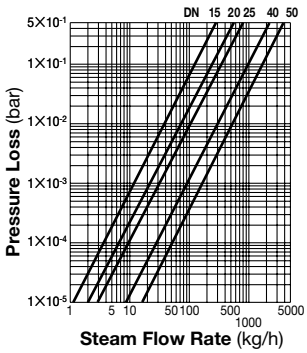

The pressure loss chart is based on a steam pressure of 10 barg. For other pressures, multiply the steam flow rate by the correction factor given in the table below. Use this value on the pressure loss chart.

Pressure (barg)	1	3	5	7	10	16	20	25
Flow Rate Correction Factor	2.24	1.62	1.34	1.16	1	0.81	0.73	0.67

Flow Rate (Air)

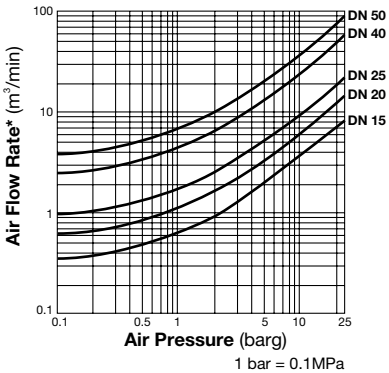

The chart to the left is used to determine the air flow rate through the DC7 separator. It is based on an air velocity in the piping of 30 m/sec. For other velocities, calculate the flow rate as follows:

Flow rate at v m/sec

$$= \text{Flow rate (at 30 m/sec)} \times \frac{v}{30}$$

* For standard air at 20 °C under atmospheric pressure

Pressure Loss (Air)

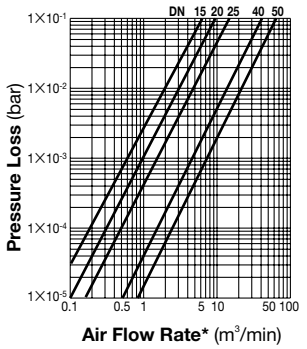

The pressure loss chart is based on an air pressure of 10 barg. For other pressures, multiply the air flow rate by the correction factor given in the table below. Use this value on the pressure loss chart.

Pressure (barg)	1	3	5	7	10	16	20	25
Flow Rate Correction Factor	5.5	2.75	1.83	1.38	1	0.65	0.52	0.44

Manufacturer
TLV® CO., LTD.
Kakogawa, Japan
is approved by LRQA Ltd. to ISO 9001/14001
ISO 9001/ISO 14001

Copyright © TLV (M)